Date : 2 Nov 21
Version : V6

230V 10A / 16A / 20A Intelligent ATS specification drawing

Automatic Transfer Switch : C13 x 8

InfraPower®

Front view :

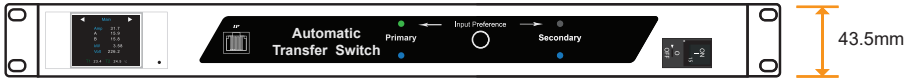

Rear view :

20A model :	Fuse	MCB
ATS-H8C13-20A-W_OE	-	1

20 Amp
Open end

Input Rating : 20A, 230V
Inlet : 20A open end x 2
Cordset : 3 meter 2.5mm sq. H05V V-F cordset x 2
Protection : 20A hydraulic MCB x 1
Circuit Details : Output 20A max. C 1 3 #1 - 8

16A model :	Fuse	MCB
ATS-H8C13-16A-W_EN	-	1

IEC 60309
16A 2P+E PLUG

Input Rating : 16A, 230V
Inlet : 16A IEC60309 2P+E plug x 2
Cordset : 3 meter 1.5mm sq. H05V V-F cordset x 2
Protection : 16A hydraulic MCB x 1
Circuit Details : Output 16A max. C 1 3 #1 - 8

16A model :	Fuse	MCB
ATS-H8C13-16A-W_C20	-	1

16 Amp
IEC320 C20

Input Rating : 16A, 230V
Inlet : 16A IEC320 C20 plug x 2
Cordset : 3 meter 1.5mm sq. H05V V-F cordset x 2
Protection : 16A hydraulic MCB x 1
Circuit Details : Output 16A max. C 1 3 #1 - 8

10A model :	Fuse	MCB
ATS-H8C13-10A-W_C14	-	1

10 Amp
IEC320 C14

Input Rating : 10A, 230V
Inlet : 10A IEC320 C14 plug x 2
Cordset : 3 meter 1.5mm sq. H05V V-F cordset x 2
Protection : 10A hydraulic MCB x 1
Circuit Details : Output 10A max. C 1 3 #1 - 8

Automatic transfer switch
Outlet : 10A Rated C13 x 8

ATS Specification :

Nominal input voltage	:	230V
Acceptable input voltage	:	±10% nominal
Input frequency	:	50 / 60Hz
Transfer time	:	10 ms typical
Electrical endurance	:	1 x 10^5 operations
Power consumption	:	Approx. 20W

Meter Features (W - Monitored)

Local Display	:	2.0" color LCD with touchscreen
Measurement	:	Voltage (V), Current (A), energy (kWh) & power factor
Accuracy	:	±1% Billing-grade
IP Access	:	via built-in IP dongle for network access
SNMP	:	V2 / V3 version, via built-in IP dongle

Operating	Temperature	:	-5 to 60 °C
Storage	Temperature	:	-25 to 65 °C
Operating	Altitude	:	0 to 2,000 m
Storage	Altitude	:	0 to 15,000 m
Humidity		:	8 to 95% RH, non-condensing

EMC	Compliance	:	CE / EMC
Safety	Compliance	:	Tested to EN 62368-1:2014 / A11:2017 standard
			Tested to EN 60730-1:2016 / A1:2019 standard
Environment Compliance		:	RoHS3 & REACH

Chassis Material	:	Steel
Chassis Color	:	Black

Product Dimension	:	442 (W) x 300 (D) x 43.5 (H) mm
Net Weight	:	5.7 kg

Packing Dimension	:	500 (W) x 540 (D) x 150 (H) mm
PDU Gross Weight	:	6.2 kg

AUSTIN HUGHES®

Design. Manufacturing. Global Services.

The company reserves the right to modify product specifications without prior notice and assumes no responsibility for any error which may appear in this publication.

Copyright 2021 Austin Hughes Electronics Ltd. All rights reserved.

Lockable IEC Outlet

- Patented design for InfraPower PDU

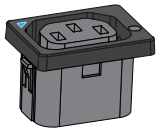

C13 Outlet

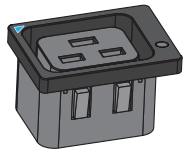

C19 Outlet

Lockable IEC Cable

- Patented design of InfraPower PDU
- Low cost, easy to lock & secure
- Proprietary for lockable IEC outlet
- Applicable to standard IEC outlet
- 6 colors & 3 lengths available
- Custom color & length on request
- VDE & ENEC approval

C13 - C14

H05VV-F 3G 0.75mm²

Cable Color	0.5M	1M	2M
Black	✔	✔	✔
Grey	✔	✔	✔
Red	✔	✔	✔
Blue	✔	✔	✔
Green	✔	✔	✔
Orange	✔	✔	✔

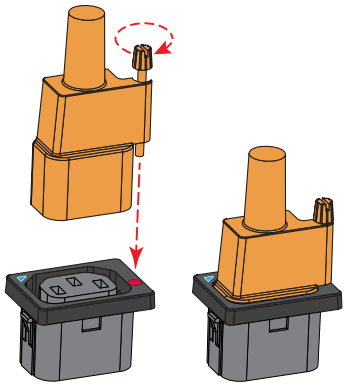

C19 - C20

H05VV-F 3G 1.5mm²

Cable Color	1M	2M
Black	✔	✔
Grey	✔	✔
Red	✔	✔
Blue	✔	✔
Green	✔	✔
Orange	✔	✔

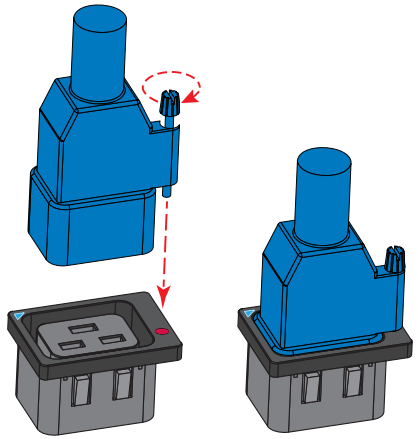

C13 - C14

lockable cable

✔ low cost
✔ easy to lock
✔ secure
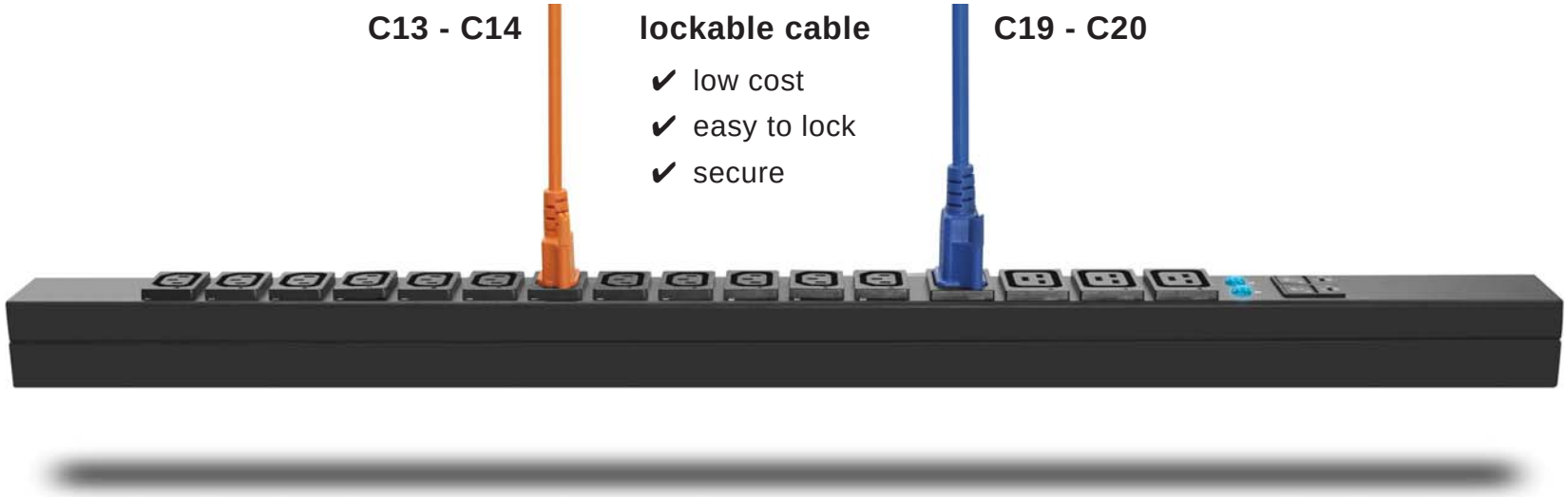
C19 - C20